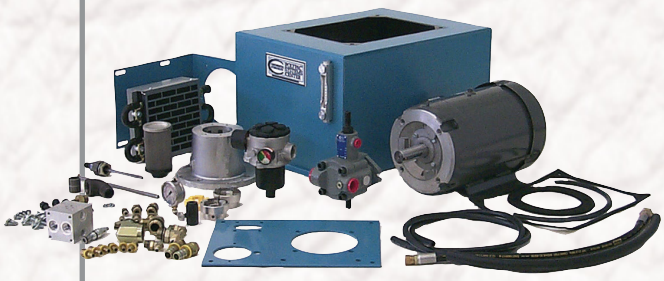

CONTINENTAL HYDRAULICS™

Catalog
Little Champ® Hydraulic Power Unit Kits

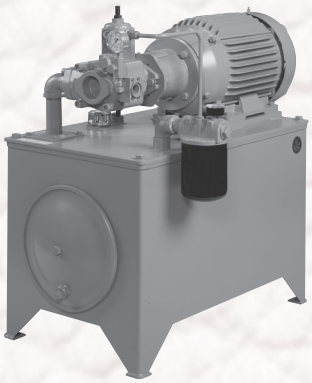

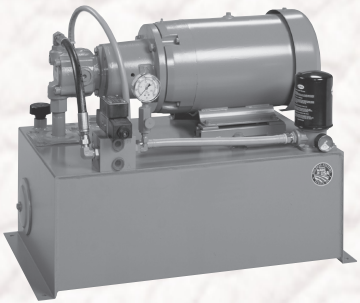

Little Champ® Power Unit Kits

10 TO 40 GALLON CAPACITY

Table of Contents

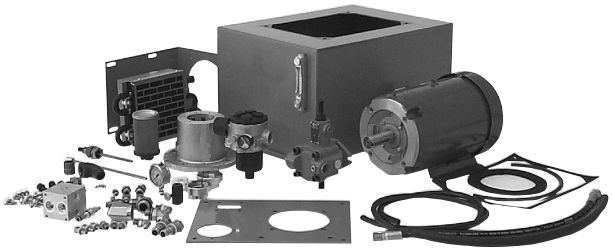

Continental Hydraulics Little Champ® Power Unit Kits can be assembled at your facility, and at your convenience. You save time and money.

- Continental stocks all the components for you.
- You can apply your labels and stickers to customize the power unit.
- Reservoirs and top plates are completely assembled - no fabrication required.
- Everything is included - even the hardware.
- Build and modify at your facility to meet your customer's needs.
- Average assembly time - less than 2 hours.

Table of Contents

General Specifications 3
Features 4
Dimension Drawing - Power Unit Kits with Pressure Connection 5
Dimension Drawing - Power Unit Kits with Pressure Block 6
Dimension Drawing - Power Unit Kits with Manifold 7
Basic Schematics - Pressure Connection/Pressure Block 8
Basic Schematics - Manifold 9
Ordering Information 10
Notes 11

CONTINENTAL HYDRAULICS™

Little Champ® Power Unit Kits

3 TO 5 GALLON CAPACITY

General Specifications

GENERAL SPECIFICATIONS	10V	20V	30V	40V
Reservoir Capacity	10 Gallons (37.8 liters)	20 Gallons (75.7 liters)	30 gallons (113.5 liters)	40 gallons (151.4 liters)
Surface Area For Heat Transfer	6.67 sq. ft. (6196.4 cm²)	8.75 sq. ft. (8128.7 cm²)	12.64 sq. ft. (11742.6 cm²)	16.53 sq.ft. (15356.4 cm²)
Heat Dissipation At ΔT	Sq. Ft. of Vertical Steel x ΔT / 1000			
Basic Weight (Less Oil, Pump, and Motor)	77 pounds (34.9 kg)	103 pounds (46.7 kg)	120 pounds (54.4 kg)	145 pounds (65.8 kg)
Usable Gallons	6.25 gallons (23.7 liters)	16.00 gallons (60.6)	25.25 gallons (95.6 liters)	36.50 gallons (138.1 liters)
Gallons Per Inch Rise	1.09 gallons (4.1 liters)	1.33 Gallons (5.0 liters)	1.33 Gallons (5.0 liters)	1.33 Gallons (5.0 liters)
Capacity, Full to Top Plate	16.35 Gallons (61.9 liters)	23.94 Gallons (90.6 liters)	34.58 Gallons (130.9 liters)	45.22 Gallons (171.2 liters)
Capacity, High on Sight Gauge	10.15 Gallons (38.4 liters)	20.62 gallons (78.0 liters)	29.93 Gallons (113.3 liters)	41.23 Gallons (156.1 liters)
Capacity, Low on Sight Gauge	6.75 Gallons (25.4 liters)	16.63 Gallons (62.9 liters)	25.94 Gallons (98.2 liters)	37.24 gallons 141.0 liters)
Pump Data (See VANE PUMP CATALOG for complete codes and specifications.)				
Flow Range	Up to 11 gpm (41.6 liters)	Up to 11 gpm (41.6 liters)	Up to 11 gpm (41.6 liters)	Up to 11 gpm (41.6 liters)
Pressure Range	Up to 3000 psi (Up to 207 bar)	Up to 3000 psi (Up to 207 bar)	Up to 3000 psi (Up to 207 bar)	Up to 3000 psi (Up to 207 bar)
Power Range	Up to 10 HP (Up to 7.5 kW)	Up to 10 HP (Up to 7.5 kW)	Up to 10 HP (Up to 7.5 kW)	Up to 10 HP (Up to 7.5 kW)

Little Champ® Power Unit Kits

10 TO 40 GALLON CAPACITY

Features

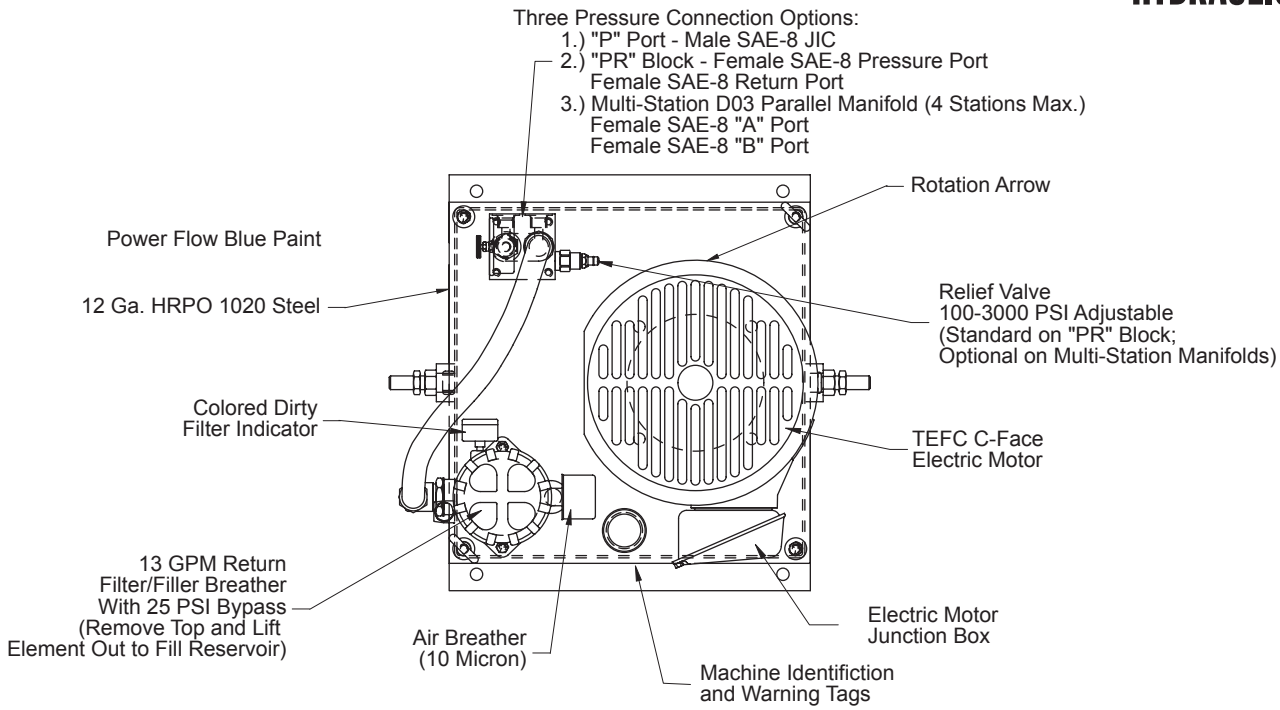

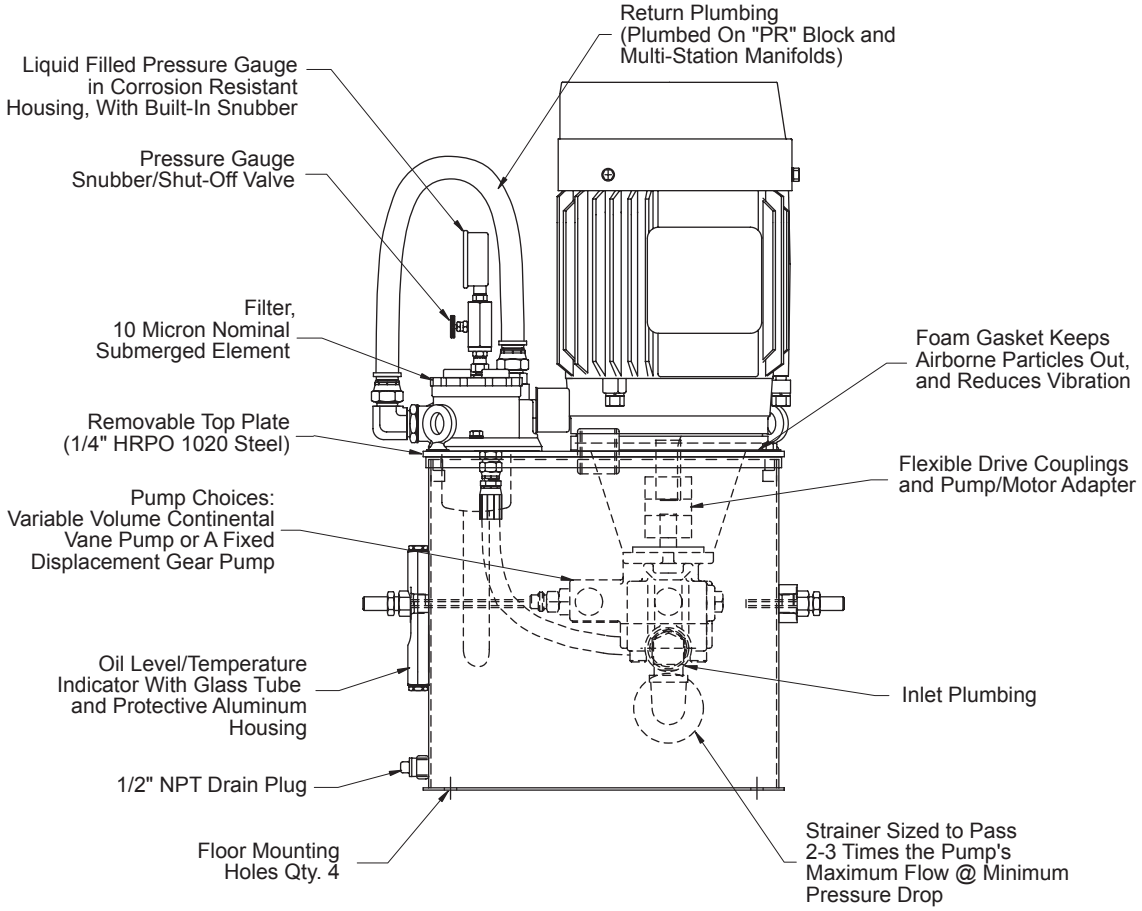

Little Champ® Power Unit Kits

10 TO 40 GALLON CAPACITY

Dimension Drawing - Power Unit Kit With Pressure Connection

Dimensions shown in: Inches (± .125) (millimeters (± 1 mm)

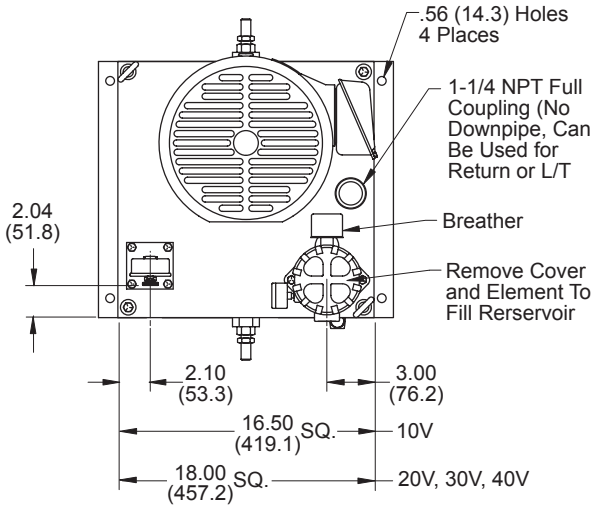

Dimension A

Motor Frame	Code	A (±.125)
56C	005T	9.92 (252.0)
56C	005S	10.44 (265.2)
56C	007T	9.92 (252.0)
56C	007S	9.92 (252.0)
56C	010T	9.92 (252.0)
56C	010S	10.92 (277.4)
56C	015T	10.92 (277.4)
56C	015S	12.98 (329.7)
56C	020T	11.98 (304.3)
145TC	020S	12.97 (329.4)
56C	030T	13.37 (339.6)
184TC	030S	14.43 (366.5)
184TC	050T	15.06 (382.5)
213TC	075T	17.56 (446.0)
215TC	100T	17.56 (446.0)
254TC	150T	23.03 (585.0)
256TC	200T	23.03 (585.0)

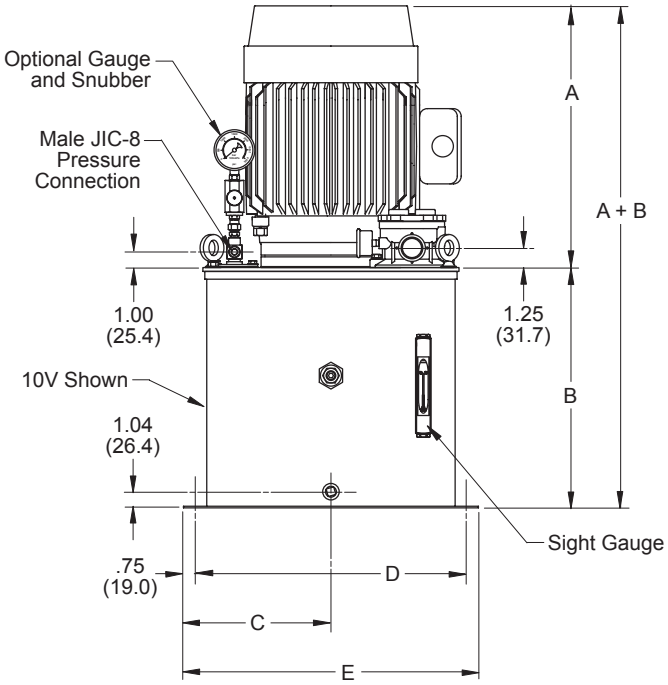

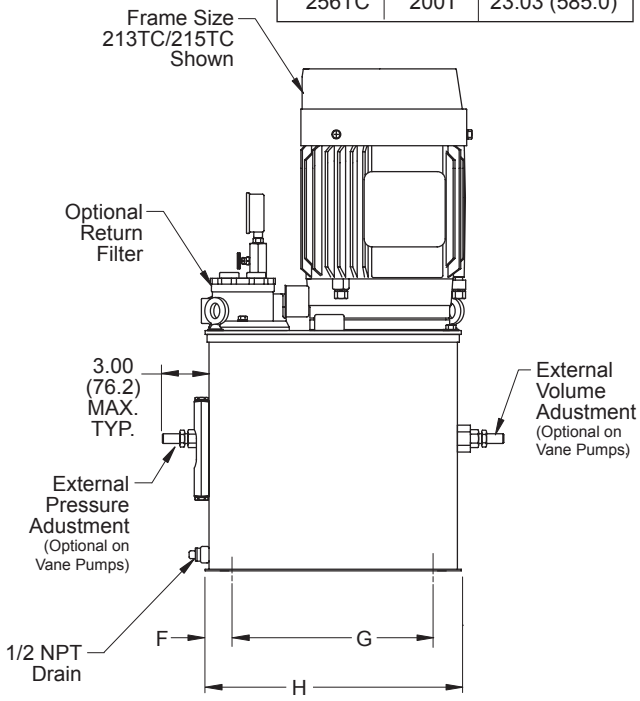

Dimensions B through H

Reservoir	B	C	D	E	F	G	H
10V	15.44 (392.2)	9.50 (241.3)	17.50 (444.5)	19.00 (482.6)	1.25 (31.7)	14.00 (355.6)	16.50 (419.1)
20V	18.44 (468.4)	10.25 (260.3)	19.00 (482.6)	20.50 (520.7)	1.50 (38.1)	15.00 (381.0)	18.00 (457.2)
30V	26.44 (671.6)	10.25 (260.3)	19.00 (482.6)	20.50 (520.7)	1.50 (38.1)	15.00 (381.0)	18.00 (457.2)
40V	34.44 (874.8)	10.25 (260.3)	19.00 (482.6)	20.50 (520.7)	1.50 (38.1)	15.00 (381.0)	18.00 (457.2)

Little Champ® Power Unit Kits

10 TO 40 GALLON CAPACITY

Dimension Drawing - Power Unit Kit With Pressure Block

Dimensions shown in: Inches (± .125) (millimeters (± 1 mm)

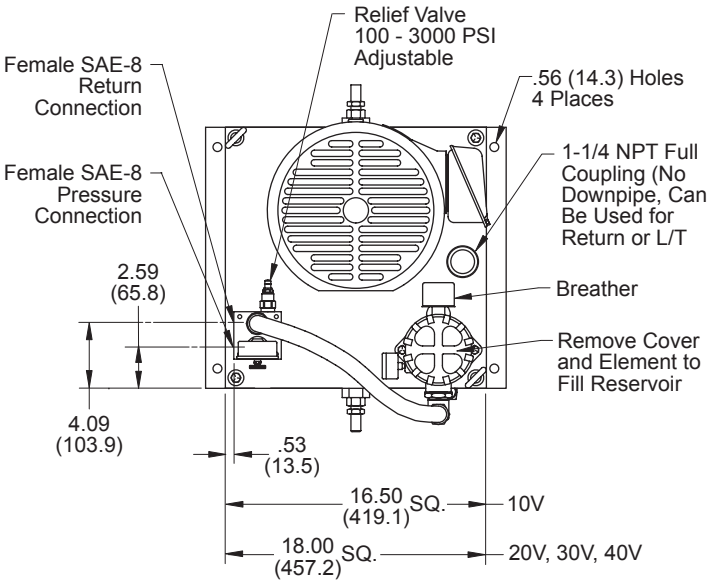

Dimension A

Motor Frame	Code	A (±.125)
56C	005T	9.92 (252.0)
56C	005S	10.44 (265.2)
56C	007T	9.92 (252.0)
56C	007S	9.92 (252.0)
56C	010T	9.92 (252.0)
56C	010S	10.92 (277.4)
56C	015T	10.92 (277.4)
56C	015S	12.98 (329.7)
56C	020T	11.98 (304.3)
145TC	020S	12.97 (329.4)
56C	030T	13.37 (339.6)
184TC	030S	14.43 (366.5)
184TC	050T	15.06 (382.5)
213TC	075T	17.56 (446.0)
215TC	100T	17.56 (446.0)
254TC	150T	23.03 (585.0)
256TC	200T	23.03 (585.0)

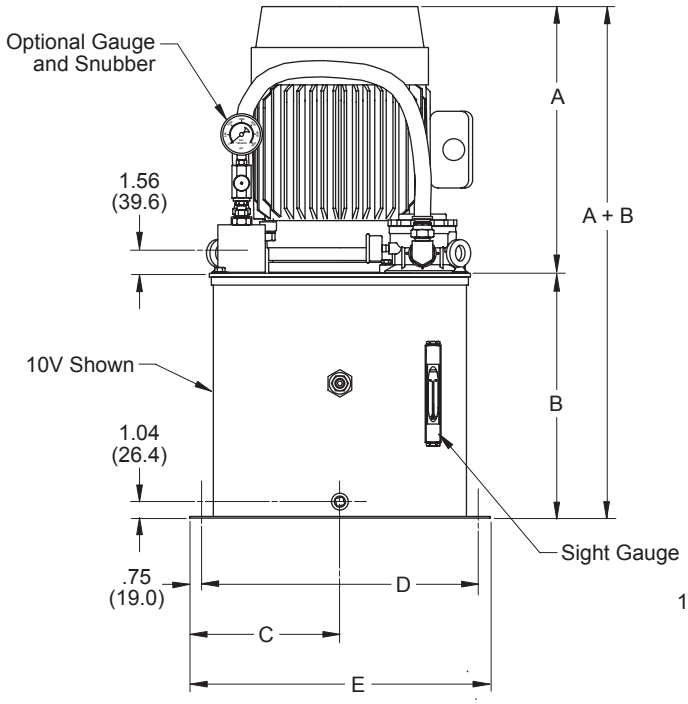

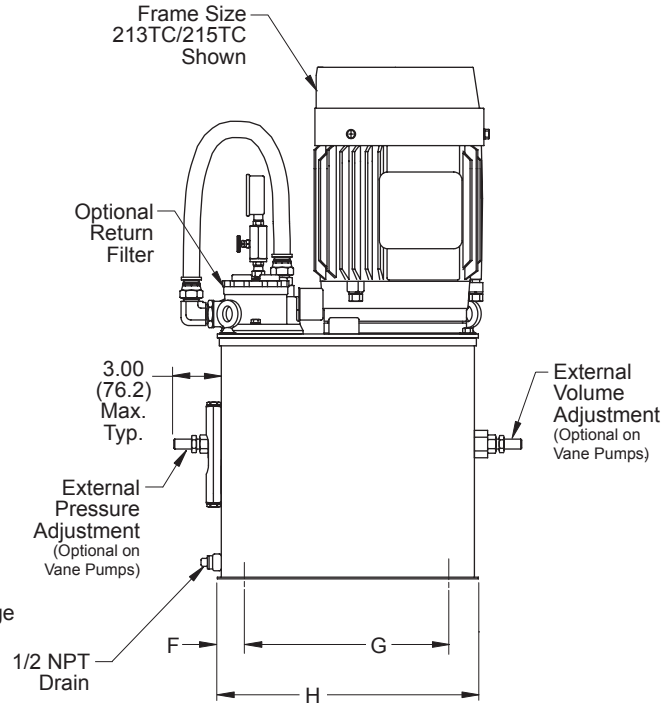

Dimensions B through H

Reservoir	B	C	D	E	F	G	H
10V	15.44 (392.2)	9.50 (241.3)	17.50 (444.5)	19.00 (482.6)	1.25 (31.7)	14.00 (355.6)	16.50 (419.1)
20V	18.44 (468.4)	10.25 (260.3)	19.00 (482.6)	20.50 (520.7)	1.50 (38.1)	15.00 (381.0)	18.00 (457.2)
30V	26.44 (671.6)	10.25 (260.3)	19.00 (482.6)	20.50 (520.7)	1.50 (38.1)	15.00 (381.0)	18.00 (457.2)
40V	34.44 (874.8)	10.25 (260.3)	19.00 (482.6)	20.50 (520.7)	1.50 (38.1)	15.00 (381.0)	18.00 (457.2)

Little Champ® Power Unit Kits

10 TO 40 GALLON CAPACITY

Dimension Drawing - Power Unit Kit With Manifold

Dimensions shown in: Inches (± .125) (millimeters (± 1 mm)

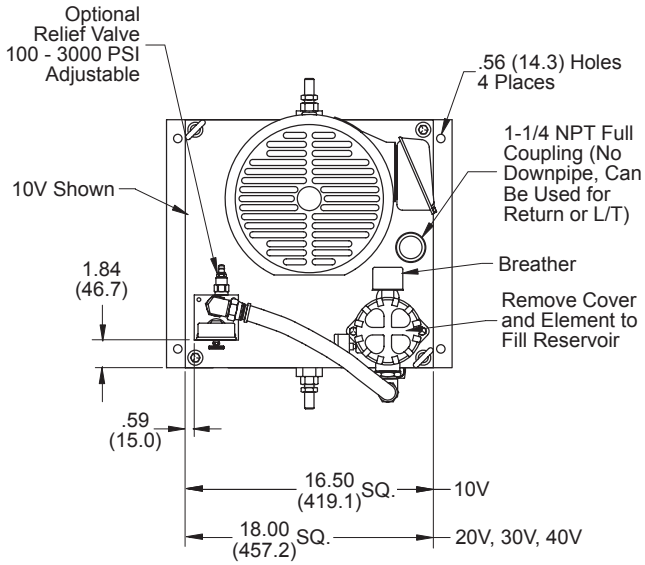

Dimension A and B

Motor Frame	Code	A (±.125)
56C	005T	9.92 (252.0)
56C	005S	10.44 (265.2)
56C	007T	9.92 (252.0)
56C	007S	9.92 (252.0)
56C	010T	9.92 (252.0)
56C	010S	10.92 (277.4)
56C	015T	10.92 (277.4)
56C	015S	12.98 (329.7)
56C	020T	11.98 (304.3)
145TC	020S	12.97 (329.4)
56C	030T	13.37 (339.6)
184TC	030S	14.43 (366.5)
184TC	050T	15.06 (382.5)
213TC	075T	17.56 (446.0)
215TC	100T	17.56 (446.0)
254TC	150T	23.03 (585.0)
256TC	200T	23.03 (585.0)

No. of Stations	B
1	10.25 (260.3)
2	12.38 (314.5)
3	14.50 (368.3)
4	16.63 (422.4)

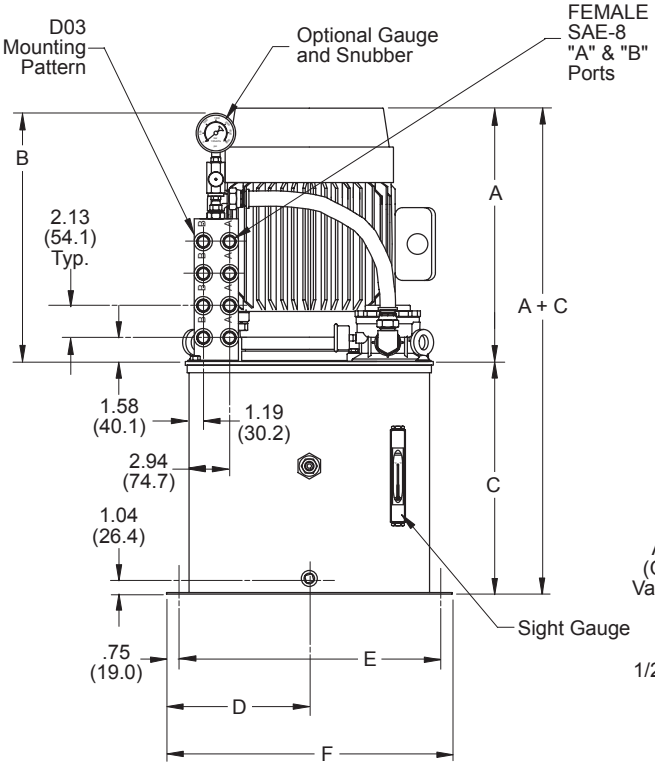

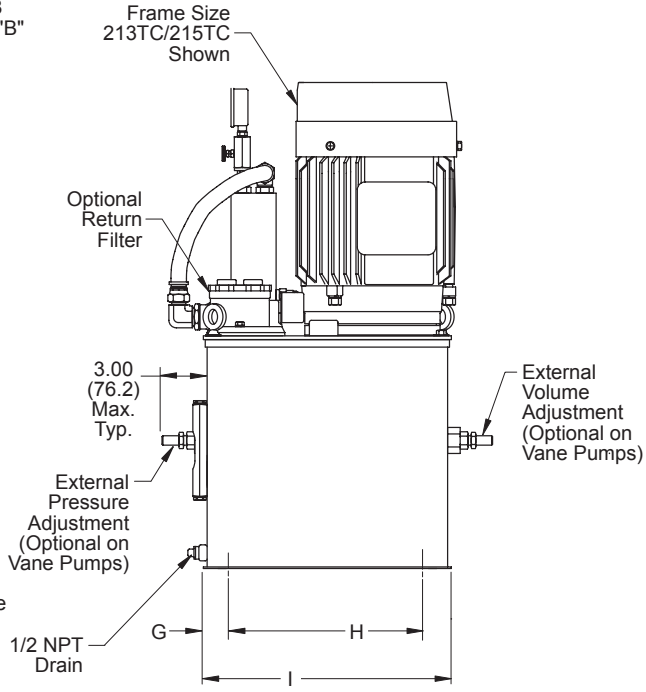

Dimensions B through H

Reservoir	C	D	E	F	G	H	I
10V	15.44 (392.2)	9.50 (241.3)	17.50 (444.5)	19.00 (482.6)	1.25 (31.7)	14.00 (355.6)	16.50 (419.1)
20V	18.44 (468.4)	10.25 (260.3)	19.00 (482.6)	20.50 (520.7)	1.50 (38.1)	15.00 (381.0)	18.00 (457.2)
30V	26.44 (671.6)	10.25 (260.3)	19.00 (482.6)	20.50 (520.7)	1.50 (38.1)	15.00 (381.0)	18.00 (457.2)
40V	34.44 (874.8)	10.25 (260.3)	19.00 (482.6)	20.50 (520.7)	1.50 (38.1)	15.00 (381.0)	18.00 (457.2)

Little Champ® Power Unit Kits

10 TO 40 GALLON CAPACITY

Basic Schematics - Pressure Connection/PressureBlock

With Pressure Connection

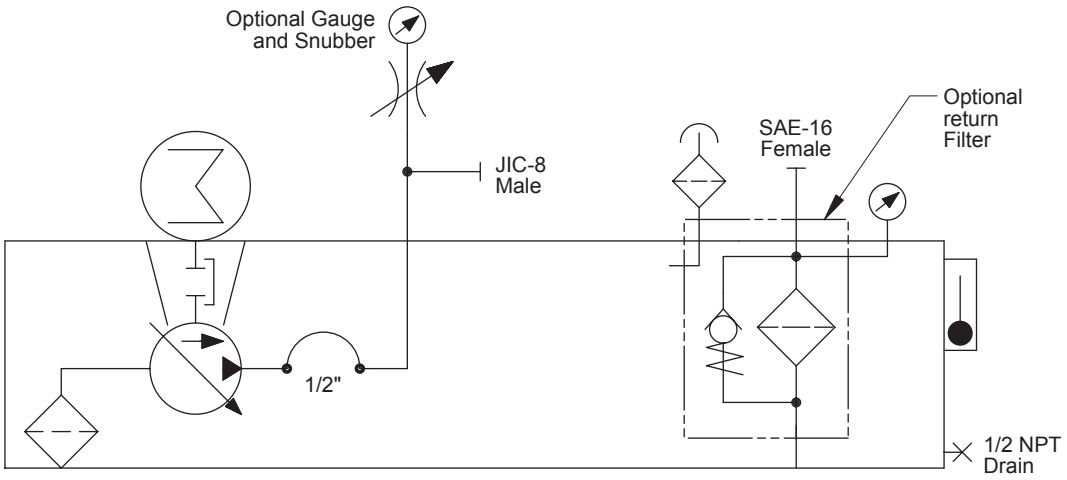

With Pressure Block

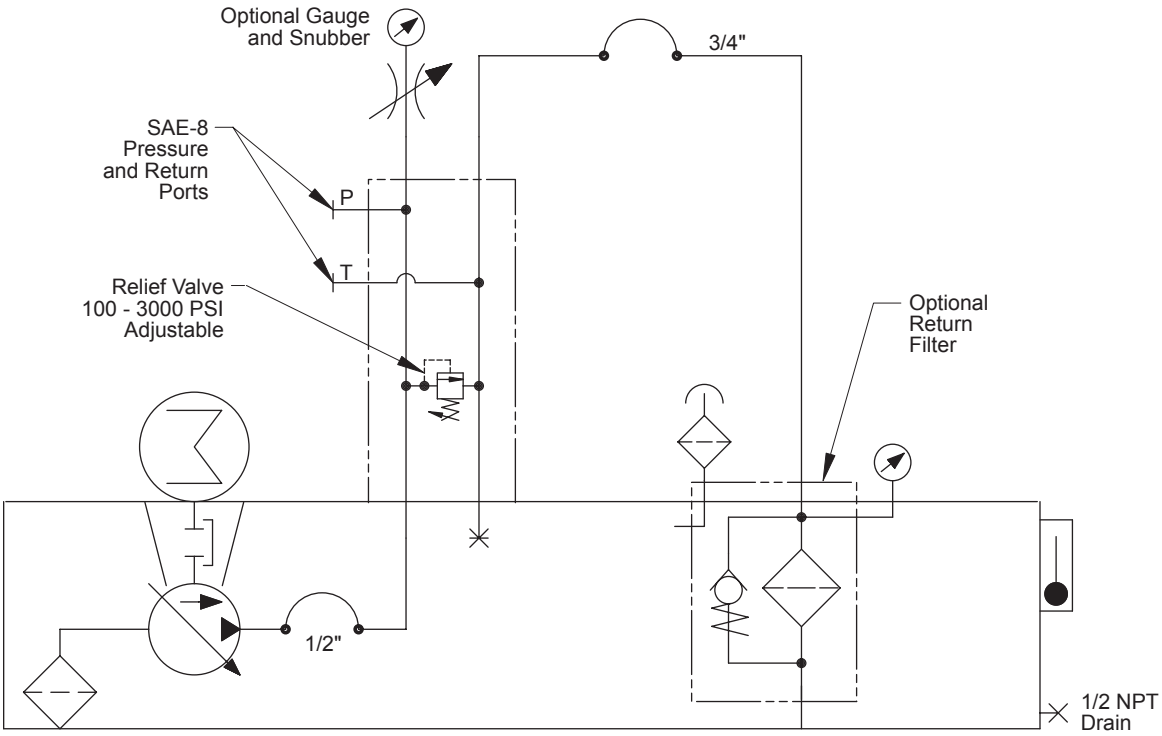

CONTINENTAL HYDRAULICS

Little Champ® Power Unit Kits

10 TO 40 GALLON CAPACITY

Basic Schematics - For Manifold

With Manifold

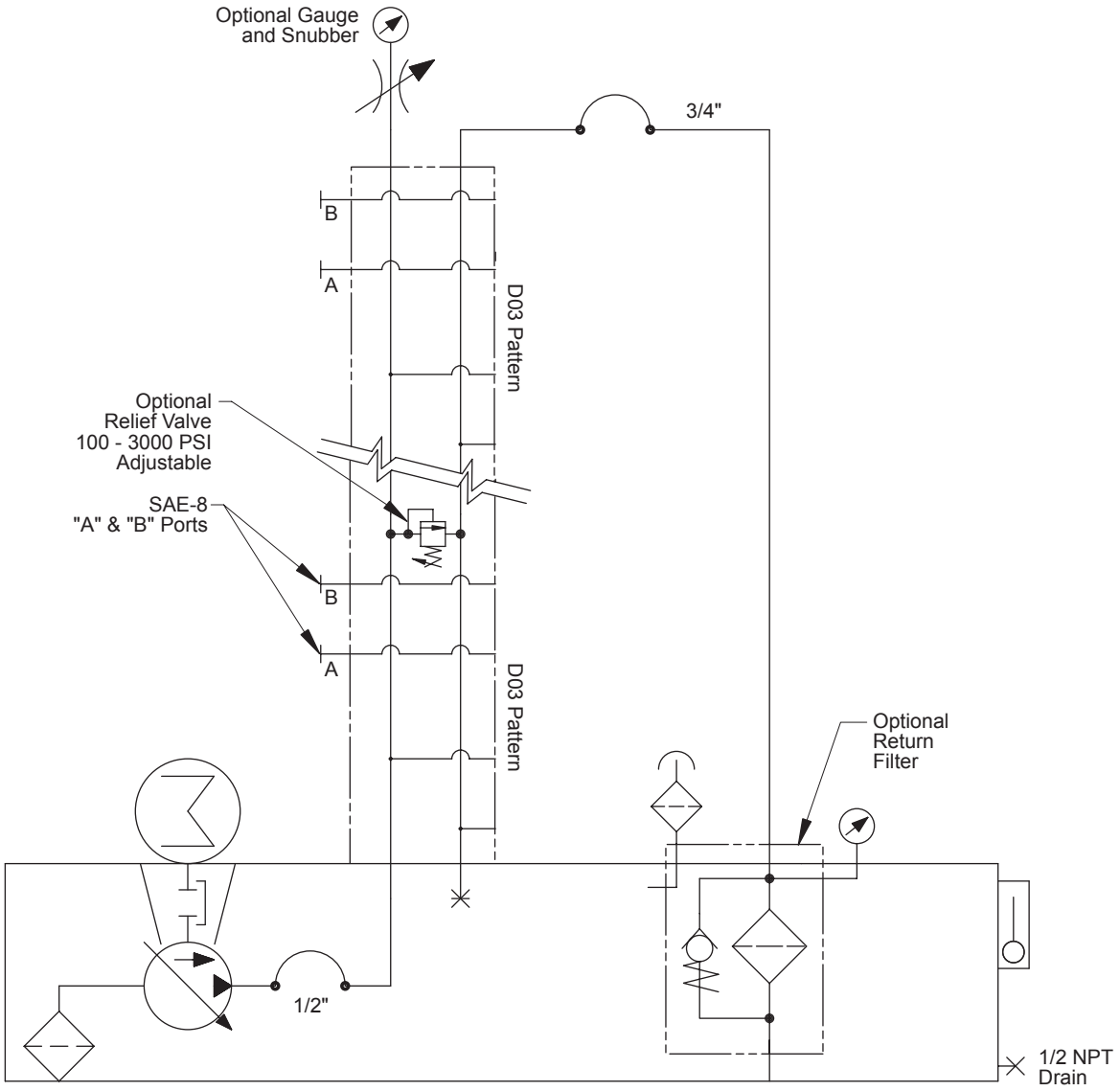

Little Champ® Power Unit Kits

10 TO 40 GALLON CAPACITY

Ordering Information

K – ☐ – ☐ – ☐ – ☐ – ☐ – ☐ – ☐

Series

Code	Description
K	Unassembled Kit

Pump

Code	gpm (lpm) @ 1725 rpm Max. Press.	Max. Pressure psi (bar)
G0.6B30	.545 (2.1)	3000 (207)
G0.8B30	.769 (2.9)	3000 (207)
G1.1B30	1.14 (4.3)	3000 (207)
G1.6B30	1.59 (6.0)	3000 (207)
G2.0B30	1.96 (7.4)	3000 (207)
G2.3B30	2.28 (8.6)	3000 (207)
G3.0B27	2.96 (11.2)	2700 (186)
G3.4B26	3.44 (13.0)	2600 (179)
G2.0B31.5	1.96 (7.4)	3150 (217)
G2.9B31.5	2.87 (10.7)	3150 (217)
G3.8B31.5	3.78 (14.3)	3150 (217)
G5.0B30	5.01 (19.0)	3000 (207)
G6.8B30	6.83 (25.8)	3000 (207)
G8.7B30	8.65 (32.7)	3000 (207)
G10.0B29	10.02 (37.9)	2900 (200)
G11.8B27	11.84 (44.8)	2700 (186)
V4B20	4.00 (15.1)	2000 (138)
V6B20	6.00 (22.7)	2000 (138)
V8B20	8.00 (30.3)	2000 (138)
V8B30	8.00 (30.3)	3000 (207)
V10B10	10.00 (37.8)	1000 (69)

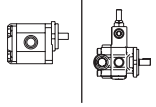

Select vane pump from the Continental Hydraulics Vane Pump Catalog or gear pump from the Power Unit Accessories Catalog.

NOTE: Pump and motor ranges listed for each reservoir size are standard combinations. For special combinations, please discuss your application with your Continental Hydraulics distributor or the factory.

Motor

Code	H.P.	Voltage*	Frame Size
005T	0.5	208/230/460/60/3	56C
005S	0.5	115/208/230/60/1	56C
007T	.75	208/230/460/60/3	56C
007S	.75	115/208/230/60/1	56C
010T	1	208/230/460/60/3	56C
010S	1	115/208/230/60/1	56C
015T	1.5	208/230/460/60/3	56C
015S	1.5	115/208/230/60/1	56C
020T	2	208/230/460/60/3	56C
020S	2	115/208/230/60/1	145TC
030T	3	208/230/460/60/3	56C
030S	3	115/208/230/60/1	184TC
050T	5	208/230/460/60/3	184TC
075T	7.5	208/230/460/60/3	213TC
100T	10	208/230/460/60/3	215TC
150T	15	230/460/60/3	254TC
200T	20	230/460/60/3	256TC

*1800 rpm

Pressure Manifold

Code	Description
P	Pressure Connection SAE-8 JIC Male
PR	With Built-In Relief SAE-8 “P” & “T” Female Ports
V1R	Single Station Manifold D03 With Built-In Relief, SAE-8 “A” & “B” Female Ports
V2R	Two Station Manifold D03 With Built-In Relief, SAE-8 “A” & “B” Female Ports
V3R	Three Station Manifold D03 With Built-In Relief, SAE-8 “A” & “B” Female Ports
V4R	Four Station Manifold D03 With Built-In Relief, SAE-8 “A” & “B” Female Ports

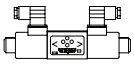

Select valves as required from the appropriate Continental Hydraulics Catalogs.

For subplate/manifold dimensions and specifications, see the Continental Hydraulics Subplate and Manifold Catalog.

Reservoir

Code	Gallon Size
10V	10
20V	20
30V	30
40V	40

Options

Code	Description
Omit	No Options
G1	Pressure Gauge 0 - 1000 psi
G1.5	Pressure Gauge 0 - 1500 psi
G2	Pressure Gauge 0 - 2000 psi
G3	Pressure Gauge 0 - 3000 psi
G5	Pressure Gauge 0 - 5000 psi
N	Relief Valve SAE-4
FRIC13	In-Tank Return Filter 13 gpm W/Breather, 10 Micron W/Indicator
EP*	External Pressure Adjustment (Vane Pumps Only)
EV**	External Volume Adjustment (Vane Pumps Only)
CV08	Check Valve Inline SAE-8, 5000 psi (345 bar) Rated
LT	Level/Temperature Switch
TH	Tank Heater 30°-100° F. (-1°- 38° C.) Adjustment

* If “EP” is not selected, specify a pressure setting.

** Pump requires Volume Control - Code 6 (PVR6-*B**-RF-O-6)

Heat Exchanger

Code	Description
Omit	No Cooler Option
HEA44C	Air-to-Oil Cooler HEA44 For Case Drain, SAE-8 (PVR6 Pump Only)
HEA41R	Air-to-Oil Cooler HEA41 For Return Line, SAE-8
HEW11R	Water-to-Oil Cooler HEA11 - Return Line 1/2 NPT Oil Port, 1 NPT Water Port

Typical Ordering Code

K-V6B20-050T-20V-V2-G3N-FRIC13-EP-HEA44C (Power Unit)
VSD03M-3A-GB-60L (Directional Control Valve - Qty. 2)
F03MSV-NDC-GA (Flow Control Valve - Qty. 2)
BD03-250 (Bolt Kit - Qty. 2)

富业行（国际）发展公司
FULL YEAR(INTERNATIONAL)TRADING CO.

香港总公司 /Hong Kong Head Office：
香港九龙葵涌华星街 8-10 号
华达工业中心 B 座 11 楼 14 室
RM.1114,11/F,Blk.B.Wah Tat Ind.，Ctr.,
8-10 Wah Sing St.,Kwai Chung Kln.,HK.
电话 /Tel:(852) 2410 8123
传真 /Fax:(852) 2401 2440

上海分公司 /Shanghai Office：
上海市即墨路 95 号 905 室　邮编：200120
Rm.905,NO.95 Ji Mo Rd.,
Shanghai,China.P.C./200120
电话 /Tel :(021)5878 0503
传真 /Fax :(021)5878 1552*613

http://www.fullyeartrading.com
E-mail:hkfullyear@yahoo.cn