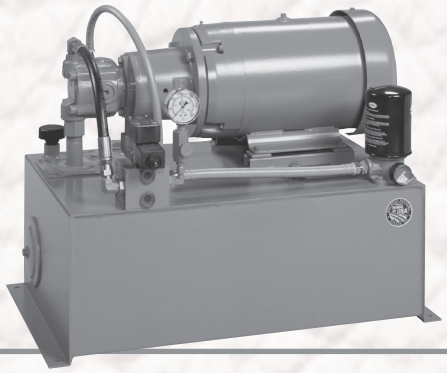

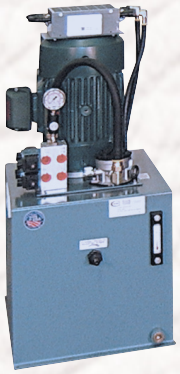

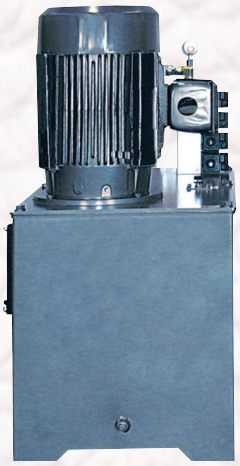

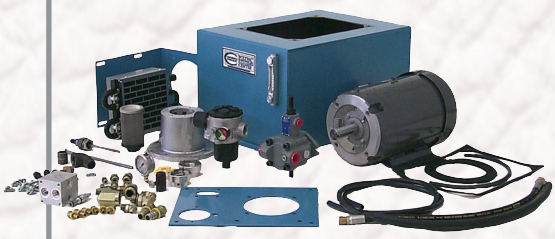

CONTINENTAL HYDRAULICS™

Catalog
Low Profile Hydraulic Power Units

Low Profile Power Units

10 TO 30 GALLON CAPACITY

General Specifications/Table of Contents

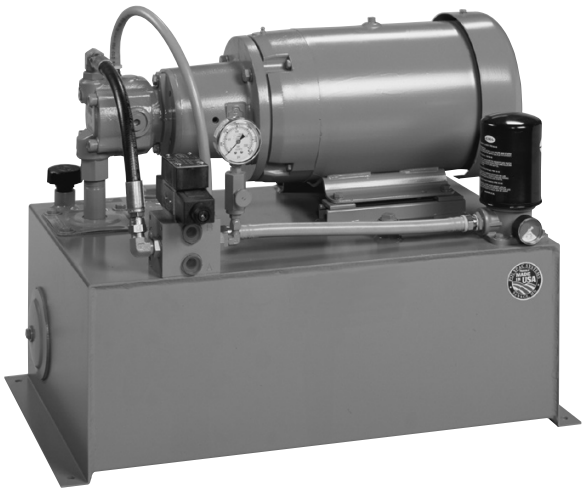

Low Profile Power Units are designed for use in locations where space is at a premium, or where the power of a NFPA/JIC-Style unit is needed in a smaller, less expensive package. They're ideal for industrial applications requiring moderate fluid volume and flow rate.

Typical applications include use with:

- Test Benches
- Machine Tools and Packaging Equipment
- Clamping Equipment
- Drilling Equipment

Low Profile Power Units are the perfect choice for demanding industrial applications where heat buildup is unlikely, and compact installation is a must.

GENERAL SPECIFICATIONS	W10	W20	W30
Reservoir Capacity	10 Gal. (37.8 liters)	20 Gal.(75.7 liters)	30 Gal.(112.7 liters)
Surface Area For Heat Transfer	4.96 sq. ft. (4607.8 cm²)	7.64 sq. ft. (7097.6 cm²)	9.58 sq. ft. (8899.8 cm²)
Heat Dissipation At ΔT	Sq. Ft. of Vertical Steel x ΔT / 1000		
Basic Weight (Less Oil, Pump, and Motor)	129 lbs. (58.5 kg)	183 lbs. (83. 0 kg)	243 lbs. (110.2 kg)
Usable Gallons	5.46 Gal. (20.7 liters)	7.62 Gal. (28.8 liters)	11.1 Gal. (42.0 liters)
Gallons Per Inch Rise	1.77 Gal.	2.47 Gal.	3.60 Gal.
Capacity, Full to Top Plate	14.08 Gal. (53.3 liters)	13.31 Gal. (50.4 liters)	19.34 Gal. (73.2 liters)
Pump Data (See Continental Hydraulics VANE PUMP CATALOG for complete codes and specifications.)			
Flow Range	Up to 11 gpm (41.6 lpm)	Up to 11 gpm (41.6 lpm)	Up to 11 gpm (41.6 lpm)
Pressure Range	Up to 3000 psi (207 bar)	Up to 3000 psi (207 bar)	Up to 3000 psi (207 bar)
Power Range	Up to 10 HP (7.5 kW)	Up to 10 HP (7.5 kW)	Up to 10 HP (7.5 kW)

Table of Contents

General Specifications 2

Features 3

Dimension Drawing - Power Unit with Gear Pump 4

Dimension Drawing - Power Unit with Vane Pump 5

Basic Schematics 6

Ordering Information 7

Low Profile Power Units

10 TO 30 GALLON CAPACITY

Features

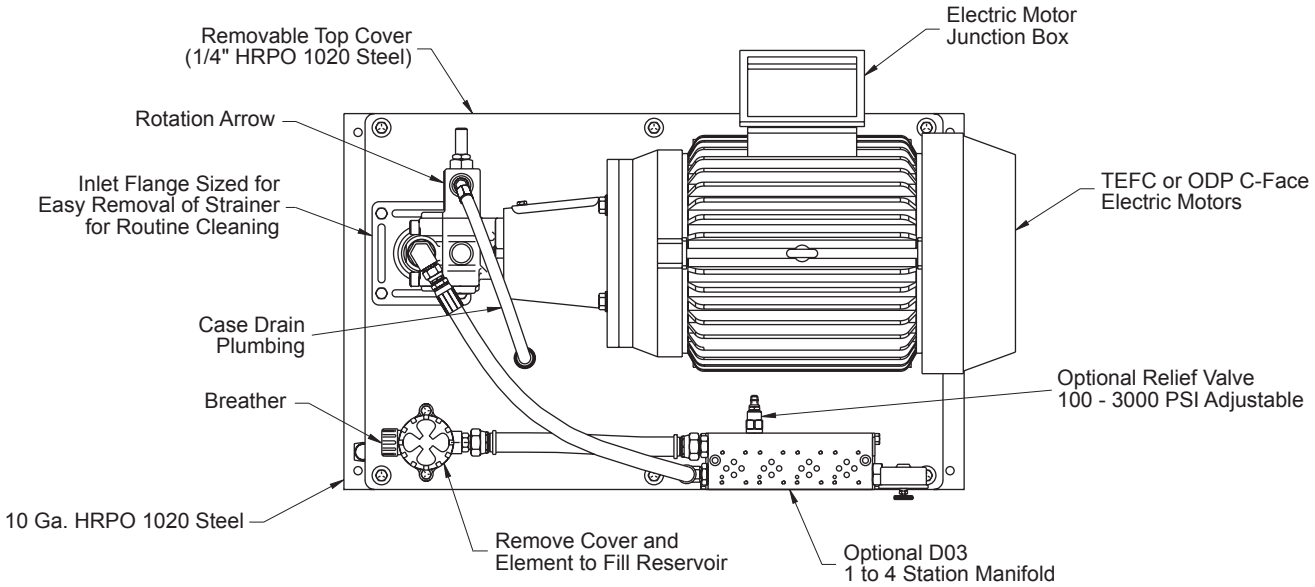

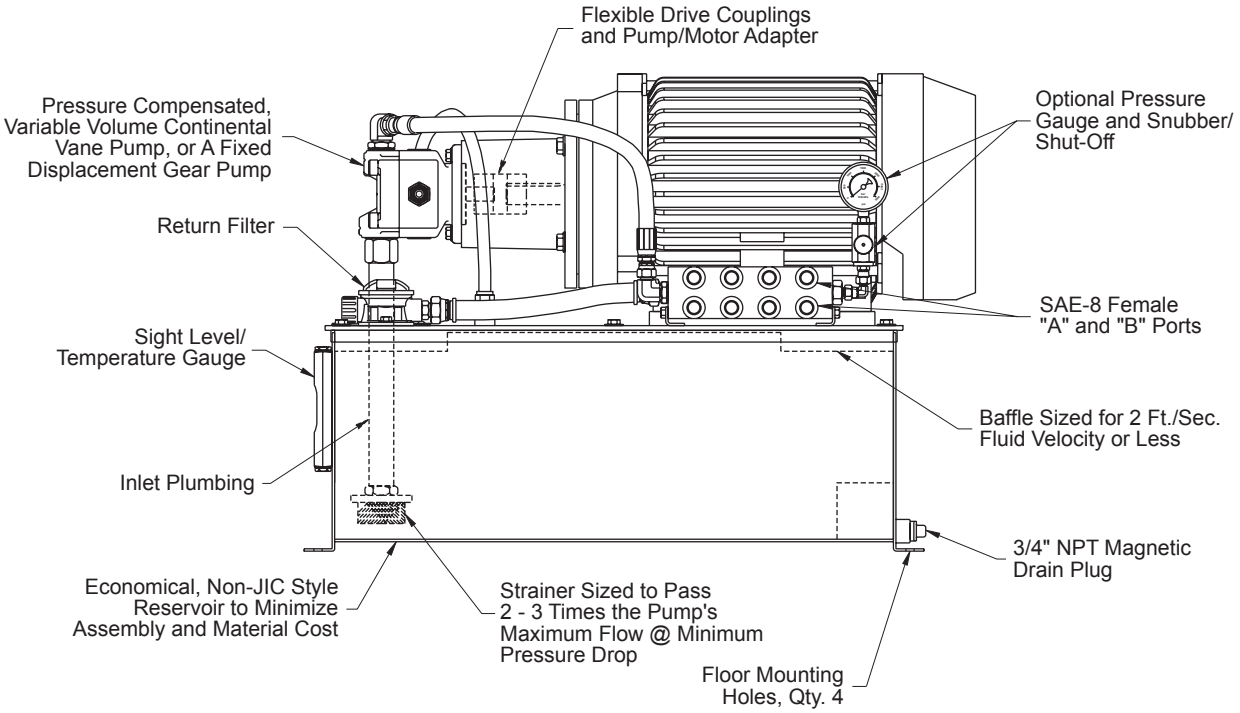

Low Profile Power Units

10 TO 30 GALLON CAPACITY

Dimension Drawing - Power Unit With Gear Pump

Dimensions shown in: Inches (± .125) (millimeters (± 1 mm)

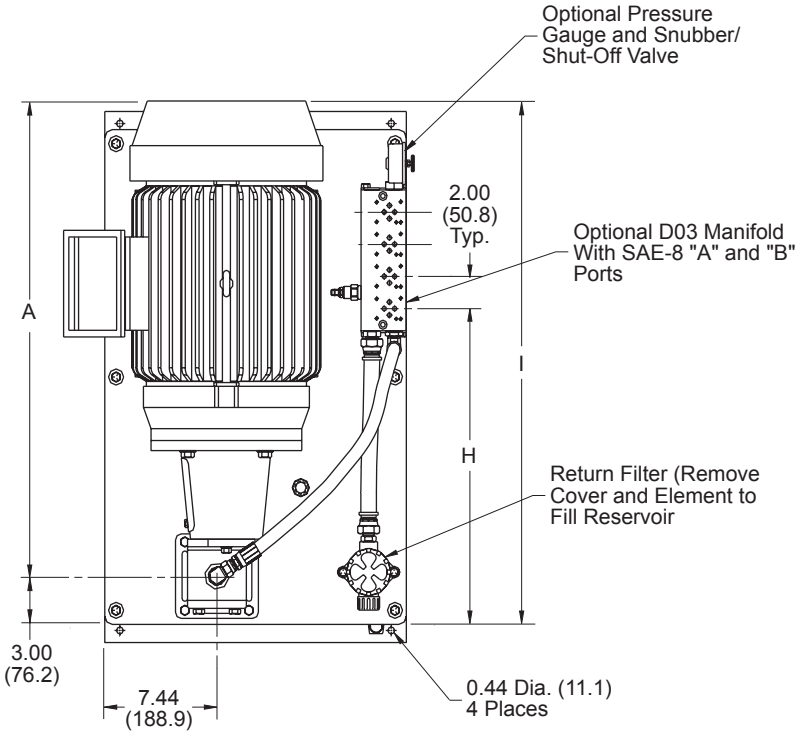

Dimensions A and B

Motor Frame	H.P.	A (±.125)	B
143TC	1	16.38 (416.1)	4.75 (120.6)
145TC	1.5	16.38 (416.1)	4.75 (120.6)
145TC	2	16.38 (416.1)	4.75 (120.6)
182TC	3	19.25 (463.5)	5.75 (146.0)
184TC	5	19.25 (488.9)	5.75 (146.0)
213TC	7.5	21.38 (543.1)	6.50 (165.1)
215TC	10	22.86 (580.6)	6.50 (165.1)
254TC	15	26.50 (673.1)	7.00 (177.8)
256TC	20	28.25 (717.6)	7.00 (177.8)

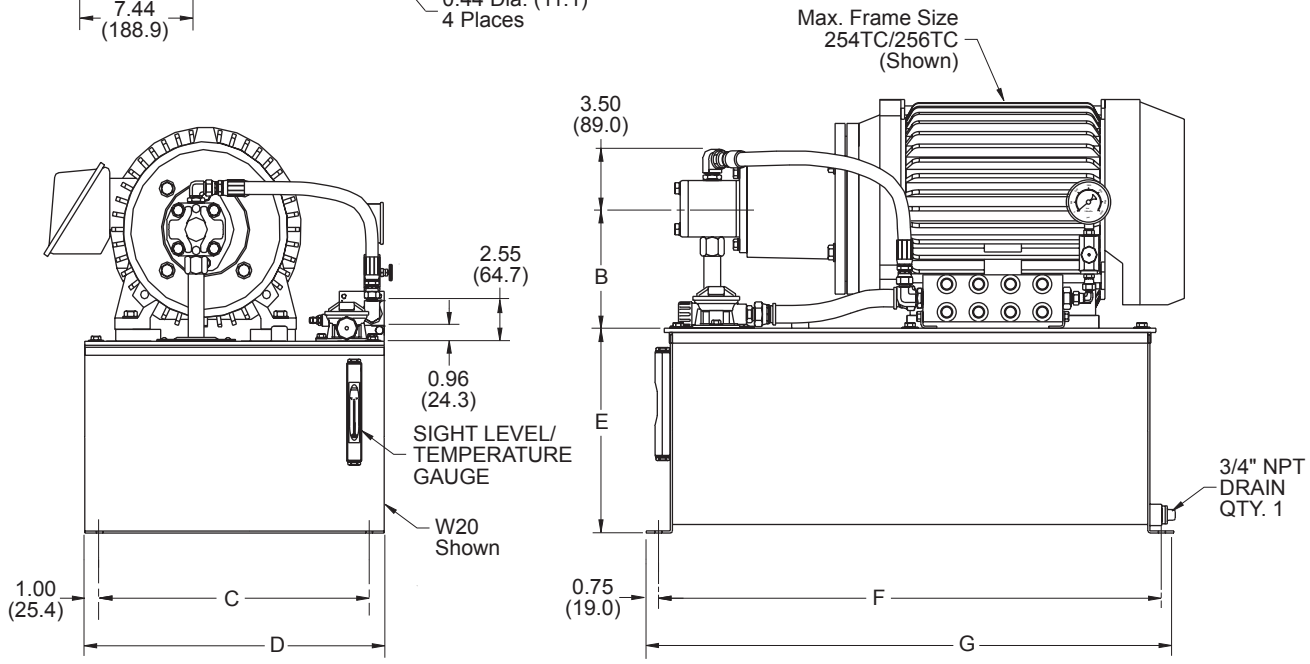

Dimensions C through I

Reservoir	C	D	E	F	G	H	I
W10	16.00 (406.4)	18.00 (457.2)	9.00 (228.6)	25.50 (647.7)	27.00 (685.8)	16.38 (416.6)	24.25 (615.9)
W20	18.00 (457.2)	20.00 (508.0)	12.00 (304.8)	31.50 (800.1)	33.00 (838.2)	19.63 (492.3)	31.25 (793.7)
W30	22.00 (558.8)	24.00 (609.6)	12.00 (304.8)	37.50 (952.5)	39.00 (990.6)	22.50 (571.5)	36.50 (927.1)

CONTINENTAL HYDRAULICS

Low Profile Power Units

10 TO 30 GALLON CAPACITY

Dimension Drawing - Power Unit With Vane Pump

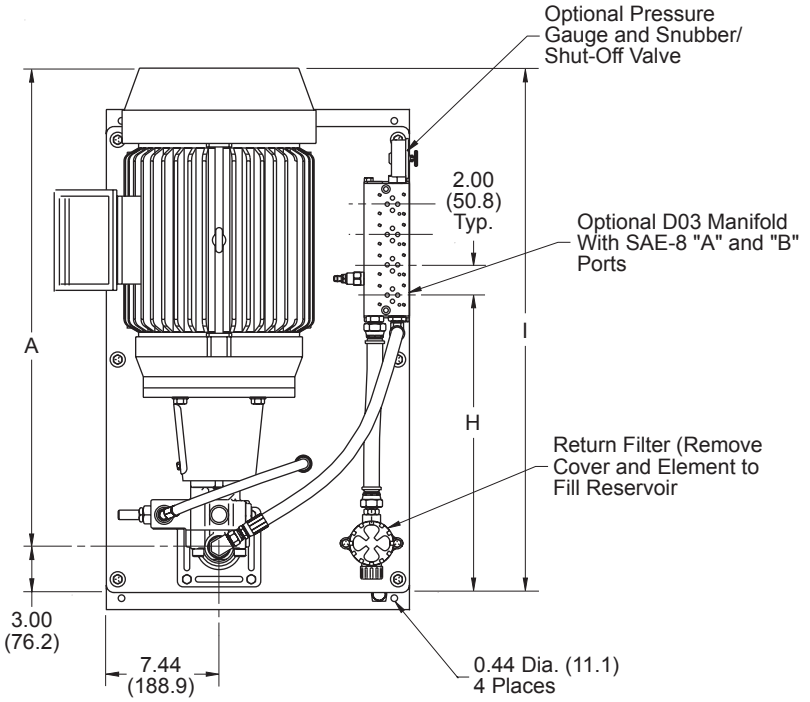

Dimensions shown in: Inches (± .125) (millimeters (± 1 mm)

Dimensions A and B

Motor Frame	H.P.	A (±.125)	B
143TC	1	19.94 (506.5)	4.75 (120.6)
145TC	1.5	19.94 (506.5)	4.75 (120.6)
145TC	2	19.94 (506.5)	4.75 (120.6)
182TC	3	21.06 (534.9)	5.75 (146.0)
184TC	5	22.06 (560.3)	5.75 (146.0)
213TC	7.5	24.25 (615.9)	6.50 (165.1)
215TC	10	25.68 (652.3)	6.50 (165.1)
254TC	15	29.68 (753.9)	7.00 (177.8)
256TC	20	31.38 (797.1)	7.00 (177.8)

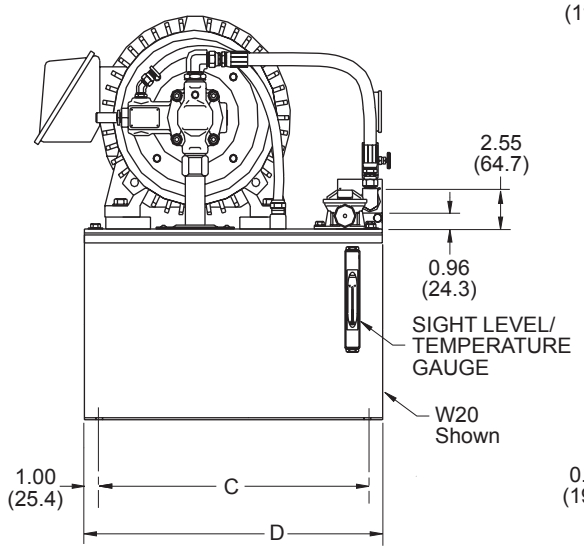

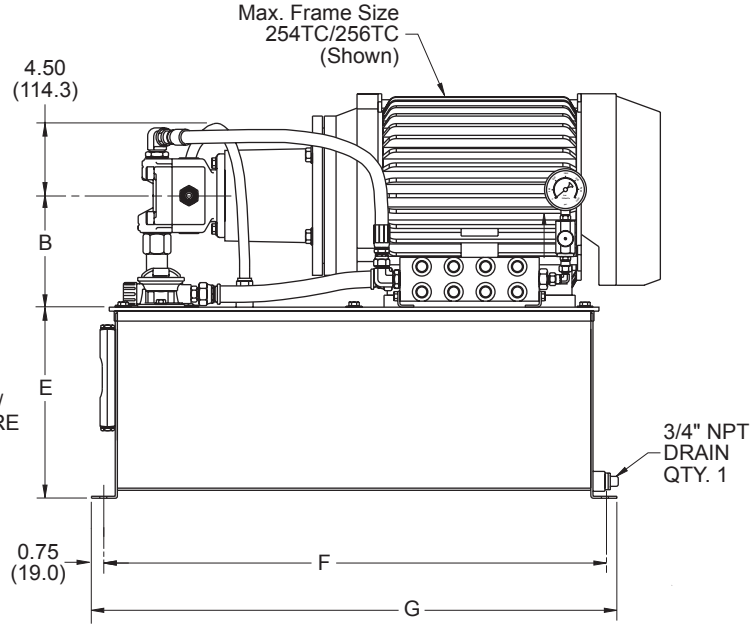

Dimensions C through I

Reservoir	C	D	E	F	G	H	I
W10	16.00 (406.4)	18.00 (457.2)	9.00 (228.6)	25.50 (647.7)	27.00 (685.8)	16.38 (416.6)	24.25 (615.9)
W20	18.00 (457.2)	20.00 (508.0)	12.00 (304.8)	31.50 (800.1)	33.00 (838.2)	19.63 (492.3)	31.25 (793.7)
W30	22.00 (558.8)	24.00 (609.6)	12.00 (304.8)	37.50 (952.5)	39.00 (990.6)	22.50 (571.5)	36.50 (927.1)

Low Profile Power Units

10 TO 30 GALLON CAPACITY

Basic Schematics

With Gear Pump

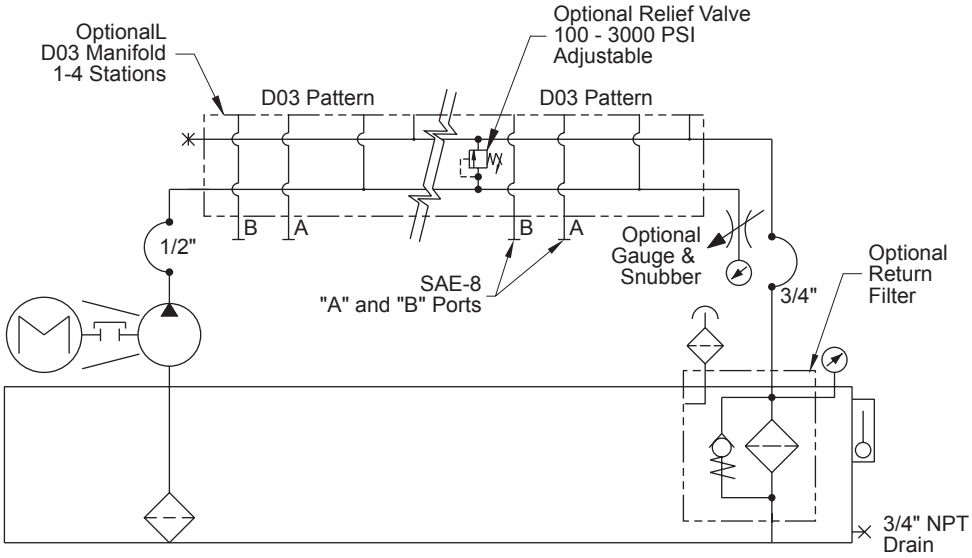

With Vane Pump

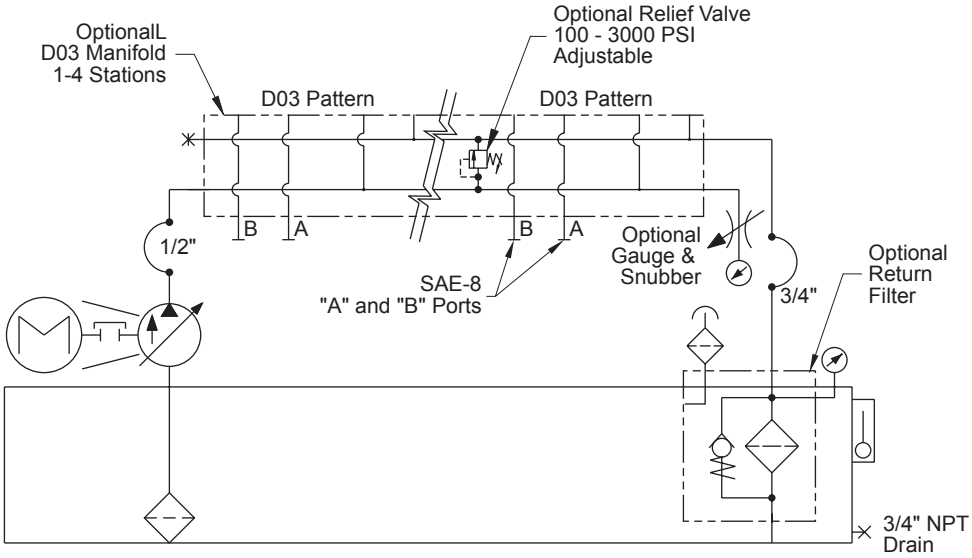

CONTINENTAL HYDRAULICS

Low Profile Power Units

10 TO 30 GALLON CAPACITY

Ordering Information

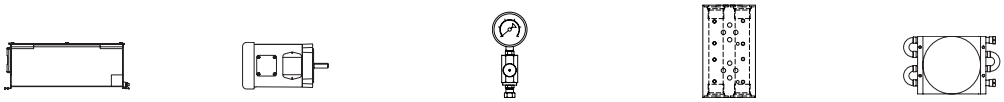

W [ ] – [ ] – [ ] – [ ] – [ ]

Series

Code	Description
W	Low Profile Series

Motor

Code	H.P.	Voltage*	Frame Size
1T	1	208/230/460/60/3	143TC
1S	1	115/208/230/60/1	143TC
1.5T	1.5	208/230/460/60/3	145TC
1.5S	1.5	115/208/230/60/1	145TC
2T	2	208/230/460/60/3	145TC
2S	2	115/208/230/60/1	145TC
3T	3	208/230/460/60/3	182TC
3S	3	115/208/230/60/1	182TC
5T	5	208/230/460/60/3	184TC
7.5T	7.5	208/230/460/60/3	213TC
10T	10	208/230/460/60/3	215TC
15T	15	230/460/60/3	254TC
20T	20	230/460/60/3	256TC

*1800 rpm

Manifold

Code	Description
Omit	No Manifold Options
PR	Pressure Block With Built-In Relief SAE-8 “P” & “T” Female Ports
V3M1S	Single Station Manifold D03, SAE-8 “A” & “B” Female Ports
V3M1SR	Single Station Manifold D03 With Built-In Relief, SAE-8 “A” & “B” Female Ports
V3M2S	Two Station Manifold D03, SAE-8 “A” & “B” Female Ports
V3M2SR	Two Station Manifold D03 With Built-In Relief, SAE-8 “A” & “B” Female Ports
V3M3S	Three Station Manifold D03, SAE-8 “A” & “B” Female Ports
V3M1SR	Three Station Manifold D03 With Built-In Relief, SAE-8 “A” & “B” Female Ports
V3M4S	Four Station Manifold D03, SAE-8 “A” & “B” Female Ports
V3M4SR	Four Station Manifold D03 With Built-In Relief, SAE-8 “A” & “B” Female Ports

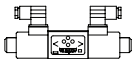

Select valves as required from the appropriate Continental Hydraulics Catalogs.

For subplate/manifold dimensions and specifications, see the Continental Hydraulics Subplate and Manifold Catalog.

Heat Exchanger

Code	Description
Omit	No Cooler Options
HEA44C	Air-to-Oil Case Drain Cooler, SAE-8 Ports (Vane Pump Only)

Reservoir and Gallon Capacity

Code	Standard Pump Combinations		Motor Size
10	SAE-AA	G0.6B30 Through G3.4B26	10
	SAE-A	G2.0B31.5 Through G11.8B27	
		PVR6	
20	SAE-AA	G0.6B30 Through G3.4B26	20
	SAE-A	G2.0B31.5 Through G11.8B27	
		PVR6	
30	SAE-AA	G0.6B30 Through G3.4B26	20
	SAE-A	G2.0B31.5 Through G11.8B27	
		PVR6	

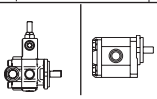

Select vane pump from the Continental Hydraulics Vane Pump Catalog or gear pump from the Power Unit Accessories Catalog.

NOTE: Pump and motor ranges listed for each reservoir size are standard combinations. For special combinations, please discuss your application with your Continental Hydraulics distributor or the factory.

Gauge

Code	Description
Omit	No Gauge Options
G1	Pressure Gauge 0 - 1000 psi
G1.5	Pressure Gauge 0 - 1500 psi
G2	Pressure Gauge 0 - 2000 psi
G3	Pressure Gauge 0 - 3000 psi
G5	Pressure Gauge 0 - 5000 psi
N	Relief Valve SAE-4

Typical Ordering Code

W20-3T-G3N-V3M2S-HEA44C (Power Unit)
PVR6-6B20-RF-O-1 (Vane Pump)
VSD03M-3A-GB-60L Station 1 (Directional Control Valve)
VSD03M-1A-GB-60L Station 2 (Directional Control Valve)
BD03-100 (Bolt Kit - Qty. 2)

-- or --

W10-2T-G3N-V3M2SR (Power Unit)
G-2.0B31.5 (Gear Pump)
VSD03M-5L-GB-60L Station 1 (Directional Control Valve)
BD03-100 (Bolt Kit - Qty. 1)
VSD03M-1A-GB-60L Station 2 (Directional Control Valve)
F03MSV-NDC-G-AA Station 2 (Flow Control Valve)
BD03-250 (Bolt Kit - Qty. 1)

CONTINENTAL HYDRAULICS™

富业行（国际）发展公司
FULL YEAR(INTERNATIONAL)TRADING CO.

香港总公司 /Hong Kong Head Office：
香港九龙葵涌华星街 8-10 号
华达工业中心 B 座 11 楼 14 室
RM.1114,11/F,Blk.B.Wah Tat Ind.，Ctr.,
8-10 Wah Sing St.,Kwai Chung Kln.,HK.
电话 /Tel:(852) 2410 8123
传真 /Fax:(852) 2401 2440

上海分公司 /Shanghai Office：
上海市即墨路 95 号 905 室　邮编：200120
Rm.905,NO.95 Ji Mo Rd.,
Shanghai,China.P.C./200120
电话 /Tel :(021)5878 0503
传真 /Fax :(021)5878 1552*613

http://www.fullyeartrading.com
E-mail:hkfullyear@yahoo.cn